Ruby Black line
STRONG QUALITY INDUSTRIAL PUMP

Ruby Air Operated Diaphragm Pumps

Ruby 015

Construction materials: **PP – ALUMINIUM – PVDF – AISI 316 - PP+CF**

New pump line with a brand new designing that offers reinforced pumping potentials. The updated designing provides even bigger performance provided with economy.

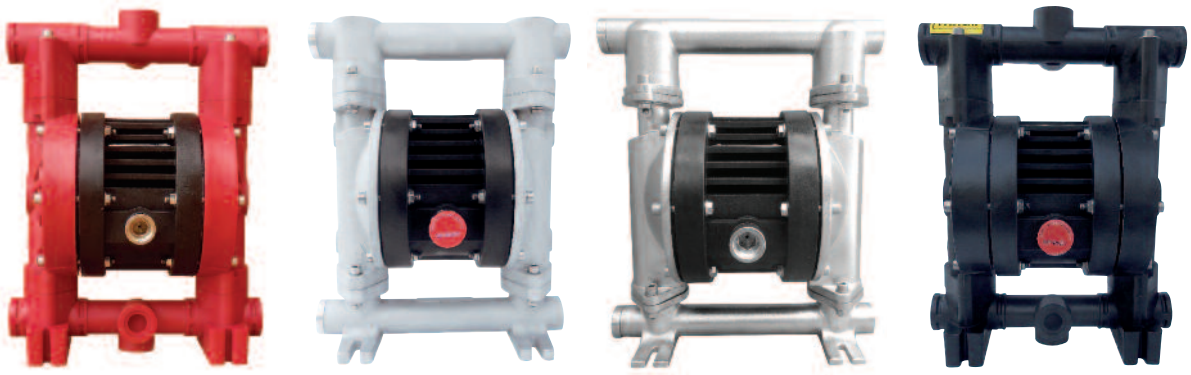

TÜV NORD ISO 9001 · EAC · CE · Ex II 2/2 G/D Ex h IIC T4 Gb/Db I M2 Ex h Mb · 5 YEARS LIMITED WARRANTY

Benefits

- Optimal performance
- Economical air consumption, ecological designing
- High efficiency for pressure/capacity
- Oil free operation
- No freezing
- New air valve designing, fully controled air passing
- Easy disassembling and re-assembling
- New generation diaphragms with embodied inner-outer piston
- New generation PTFE diaphragms of embodied type for long-life operation (compound)
- Advanced quality Full capacity PTFE-A diaphragms for high chemical and mechanical applications
- Potential to be submersible (on request)
- Possibility to be used in dirty environments due to their closed designing
- Easy manifold reverse
- Automatic suction

Ruby 015 composition codes

Pump model	Body	Center block	Diaphragms	Valve Seats	Balls	O-ring	Other options
Ruby 015	**P:** PP **V:** PVDF+CF **A:** Aluminium **PC:** PP+CF **SL:** AISI 316 electropolished	**P:** PP **PC:** PP+CF **W:** PP FDA	**N:** NBR Conductive **E:** EPDM Conductive **T:** TFM+(EPDM Conductive) **Z:** TFM-A+(EPDM Conductive)	**N:** NBR **E:** EPDM **P:** PP **T:** PTFE **V:** PVDF **A:** Aluminium **S:** AISI 316 **O:** ACETAL	**N:** NBR **E:** EPDM **T:** PTFE **S:** AISI 316	**N:** NBR **F:** FKM **T:** PTFE **E:** EPDM	**D:** Twin Manifold **F:** Flange PN10/ANSI/JIS

Ruby Black line
STRONG QUALITY INDUSTRIAL PUMP

Ruby Air Operated Diaphragm Pumps

Ruby Innovative oil free air valve

The heart of the Ruby pump is our innovative, new design air valve. In respect for New Era demands, to create and offer High Quality product, with high interest for the environment and it's protection,the Air Valve of the Ruby Diaphragm Pumps has been created to offer:

- Oil free operation
- Low need for maintenance
- Not affected by minor contamination of compressed air
- Significant energy saving
- Non freezing operation
- External environment operation
- No dead centre
- Long life
- Reliability

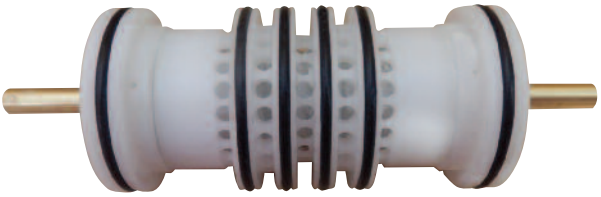

Advance unified diaphragms featuring:

- Easy installation and maintenance
- Excellent service life
- Inventory cost reduction
- Improved performance
- Greater displacement per cycle
- No center hole, elimination of potential leak paths.
- There is no need for the main axis to be insured
- They can be screwed and unscrewed without the use of tools



Ruby Black line
STRONG QUALITY INDUSTRIAL PUMP

Ruby Air Operated Diaphragm Pumps

Advance Unified Diaphragm offers:

The prominences decrease the stretching of the PTFE during the regression and prevent it from cracking.

Innovative conical shape ideal for optimal performance and life, low pressure requirements for start-up, ideal suction



Innovative diaphragm support side, offers flexibility, long life and protects from cavitation

Special internal plate supports your diaphragm in every movement

Technical data

ATEX certification	CE Ex STANDARD : II 3/3 G/D Ex h IIB T4 Gc/Dc CONDUCT : II 2/2 G/D Ex h IIC T4 Gb/Db – I M2 Ex h Mb
Construction materials	PP, PVDF, ALUMINIUM, AISI 316, PP+CF
Diaphragms	PTFE with Conductive EPDM (compound) PTFE-A Full Capacity with conductive EPDM (compound) NBR-BUNA Conductive EPDM Conductive
Intake/delivery connections	1/2" BSP G-Flange on Request
Air connection	½"
*Max. self-priming capacity	4 m
*Max. flow rate	72 l/min
Max. head	70 m
Max. air supply pressure	7 bar
Diameter	3,0 mm
Max. operating temp.	PP 60°C, PVDF 95°C, Alu 95°C, AISI 316 95°C
Weight PP	4,0 kg
Weight PVDF	5,5 Kg
Weight Aluminium	6,0 kg
Weight AISI 316	9,0 kg

* The curves and performance values refer to pumps with submerged suction and a free delivery outlet with water at 20°C, and vary according to the construction material.

Performance

RUBY 015 - FULL CAPACITY PTFE - A FITTED

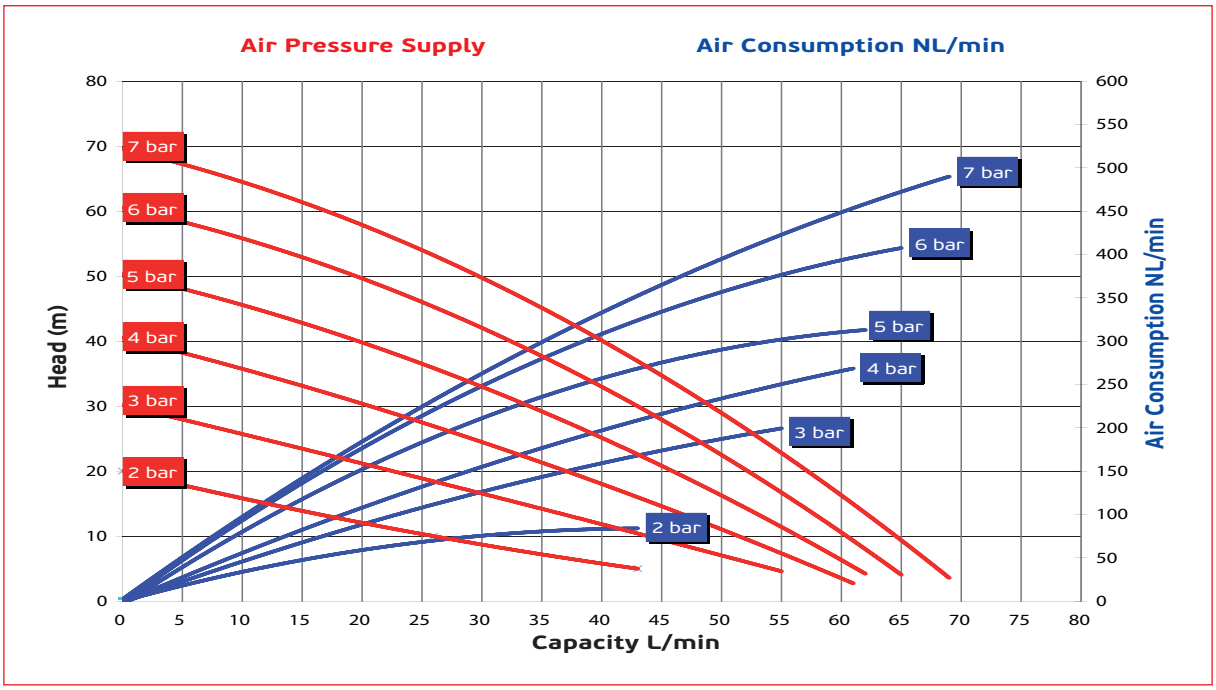

RUBY 015 - RUBBER FITTED

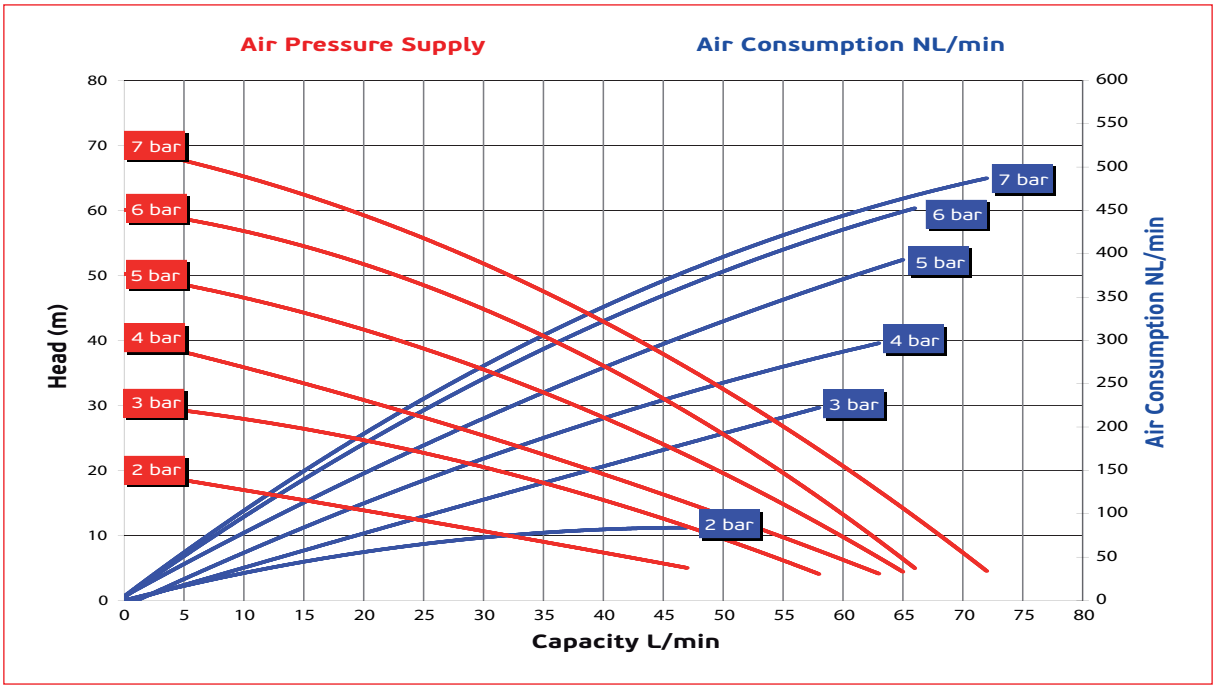

Performance

RUBY 015 - PTFE FITTED

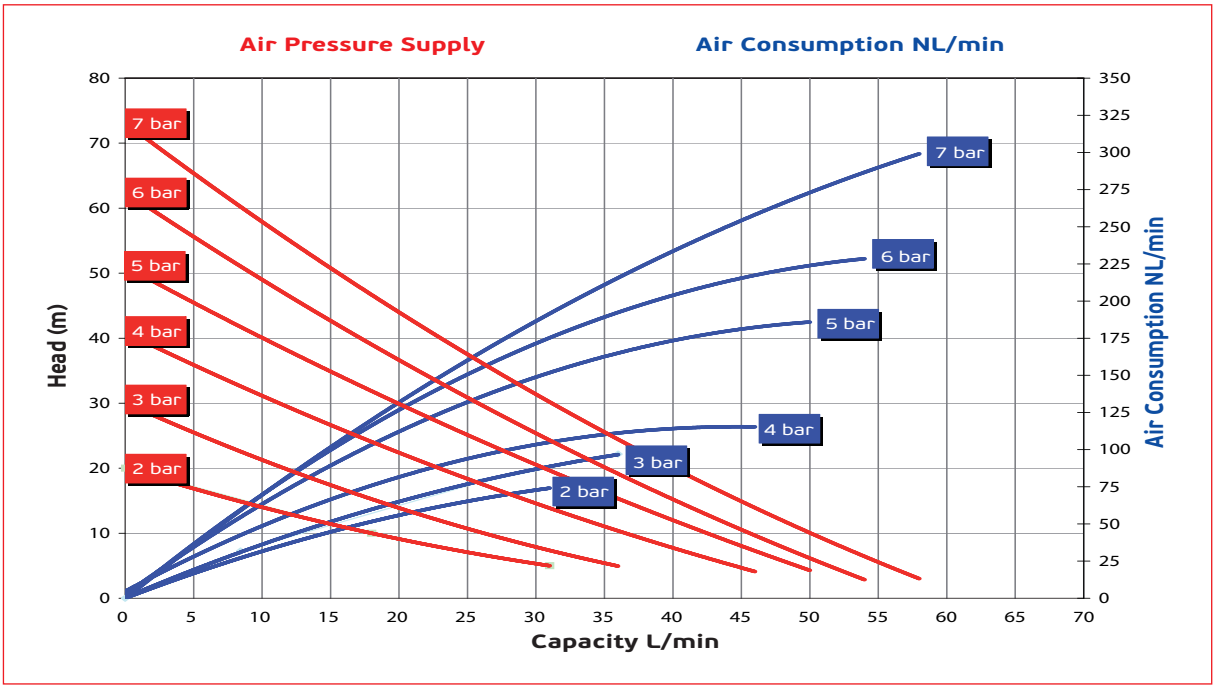

Dimensions PP-PVDF

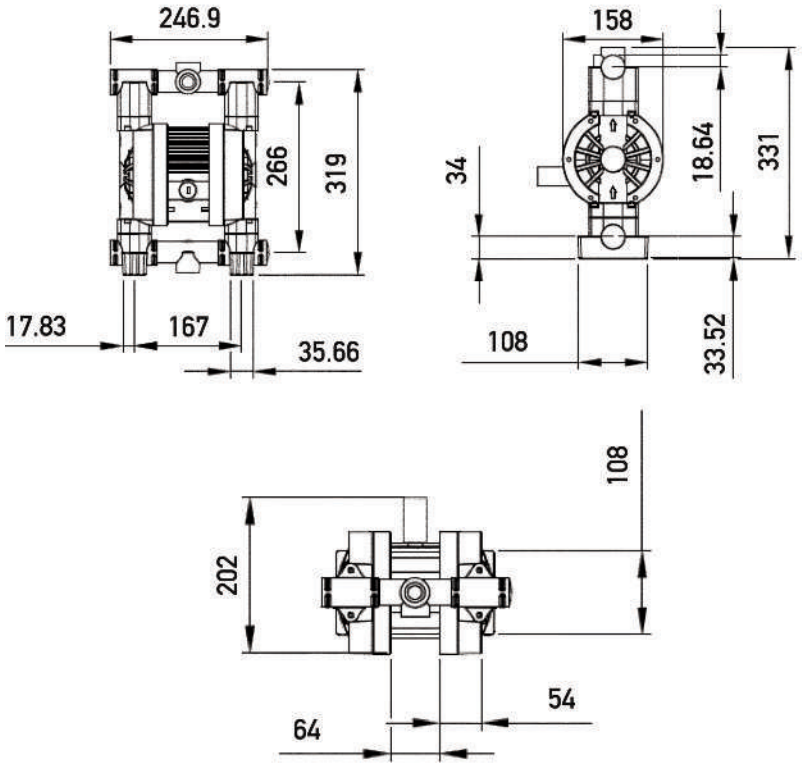

Dimensions Aluminium - AISI316

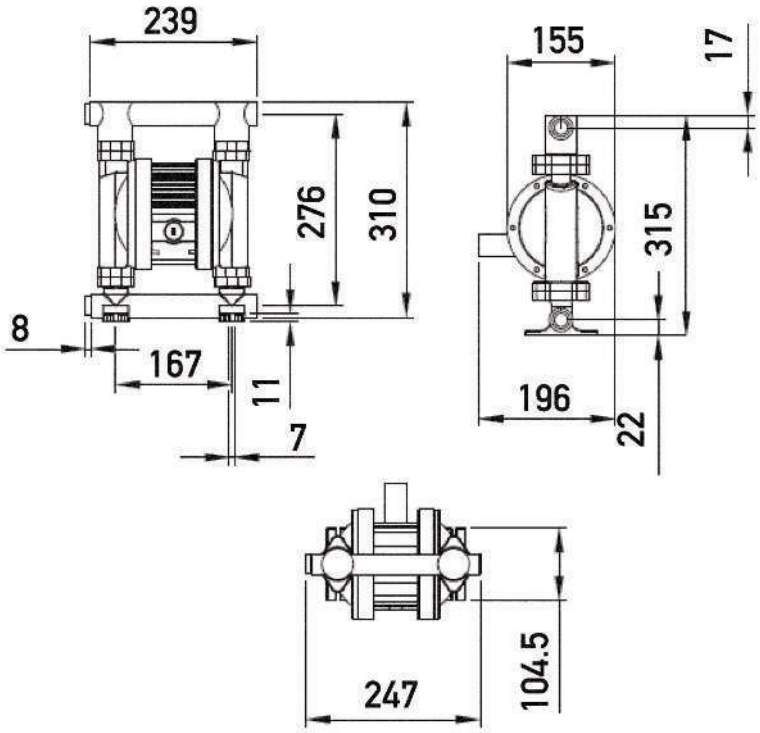

Ruby Black line
STRONG QUALITY INDUSTRIAL PUMP

Ruby Air Operated Diaphragm Pumps

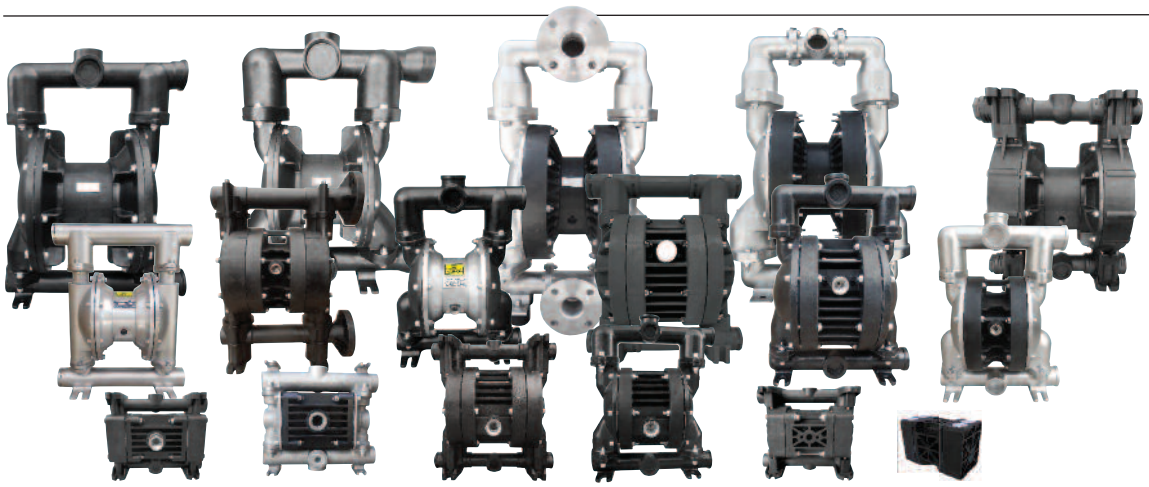

AD AlphaDynamic PUMPS
We Make The Difference

RubyPump Powered by ALPHADYNAMIC PUMPS

Production Plant - Greece
Inofita Industrial area
59th km Nat.Road Athens- Lamia
GR 320 11 Inofita Viotia, Greece
Tel +30 215 215 9520 , +30 215 215 9580
Email: Sales@alphadynamic.eu
www.alphadynamic.eu

Sales Office – England
Rockleigh House, 37 Burton Road
Ashby de la Zouch , Leicestershire
LE65 2LF - United Kingdom (UK)
Registered in ENGLAND & WALES
Registration number 09706219
Tel +44 1213 680 324 , +44 1213 680472
Email: Sales@alphadynamic.eu
www.alphadynamic.eu