DATA SHEET

2017-04-06 Page 1 / 3

DAB PUMPS S.p.A.
Via Marco Polo, 14 - 35035 Mestrino (PD), Italy
Tel. +39 049 5125000 - Fax +39 049 5125950
www.dabpumps.com

Receiver

Society
Reference
Address
Phone
Fax
E-mail

From

Item n° :
60168868

Model :
K 28/500 T IE2

Pump data

MEI ≥ 0,70

Pressure rating :	8 bar (800 kPa)
Min. fluid temperature :	-15 °C
Max. fluid temperature :	110 °C
Max. Ambient temperature :	40 °C

Requested data

Flow :	0.00 m³/h
Head :	0.00 m
Fluid :	Water
Fluid Temperature :	20 °C
Density :	0.99819 kg/dm³
Kinematic viscosity :	1.0004 mm²/s
Vapor pressure :	2.20 kPa

Hydraulic data (duty point)

Flow :
Head :
NPSH :
Shaft power P2 :
Efficiency :

Materials

Pump body	Cast iron 200 UNI ISO 185
Support	Cast iron 200 UNI ISO 185
Impeller	Cast iron 200 UNI ISO 185
Mechanical seal	Carbon/Ceramic
OR ring	EPDM Rubber
Shaft with rotor	AISI 303 X10 CrNiS 1809 UNI 6900/71

Motor data

Motor brand :	DAB	
Nominal power P2 :	4 kW	
Rated speed :	2880 1/min	
Rated voltage :	3~ 230 V / 400 V	50 Hz
Nominal current :	14.7 / 8.5 A	
Degree of protection :	IP 55	

Pump connection

Suction side :	2 " 1/2 G/ 8 bar (800 kPa)
Discharge side :	2 " G / 8 bar (800 kPa)

Curve tolerance according to ISO 9906

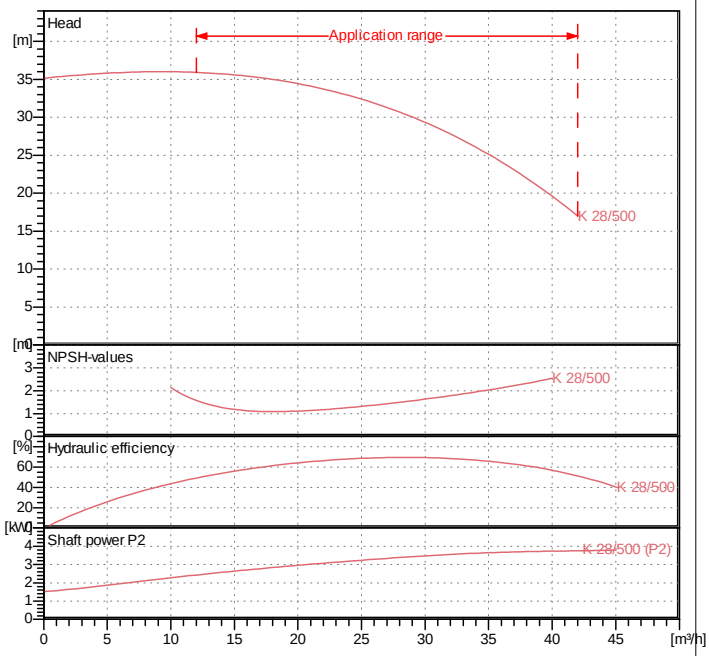

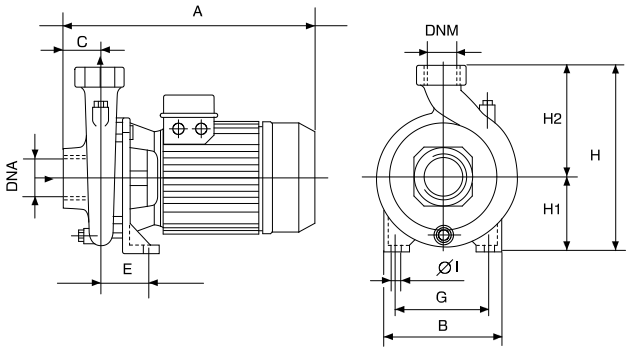

Weight : 40.6 kg

Dimensions in mm

A	440		
B	240		
C	62		
DNA	2" 1/2 G		
DNM	2" G-M		
E	100		
G	155		
H	312		
H1	132		
H2	180		

DAB PUMPS reserves the right to make modifications without notice

DAB PUMPS S.p.A.
Via Marco Polo, 14 - 35035 Mestrino (PD), Italy
Tel. +39 049 5125000 - Fax +39 049 5125950
www.dabpumps.com

Receiver	From
Society Reference Address Phone Fax E-mail	

K 28/500 T IE2

Curve tolerance according to ISO 9906

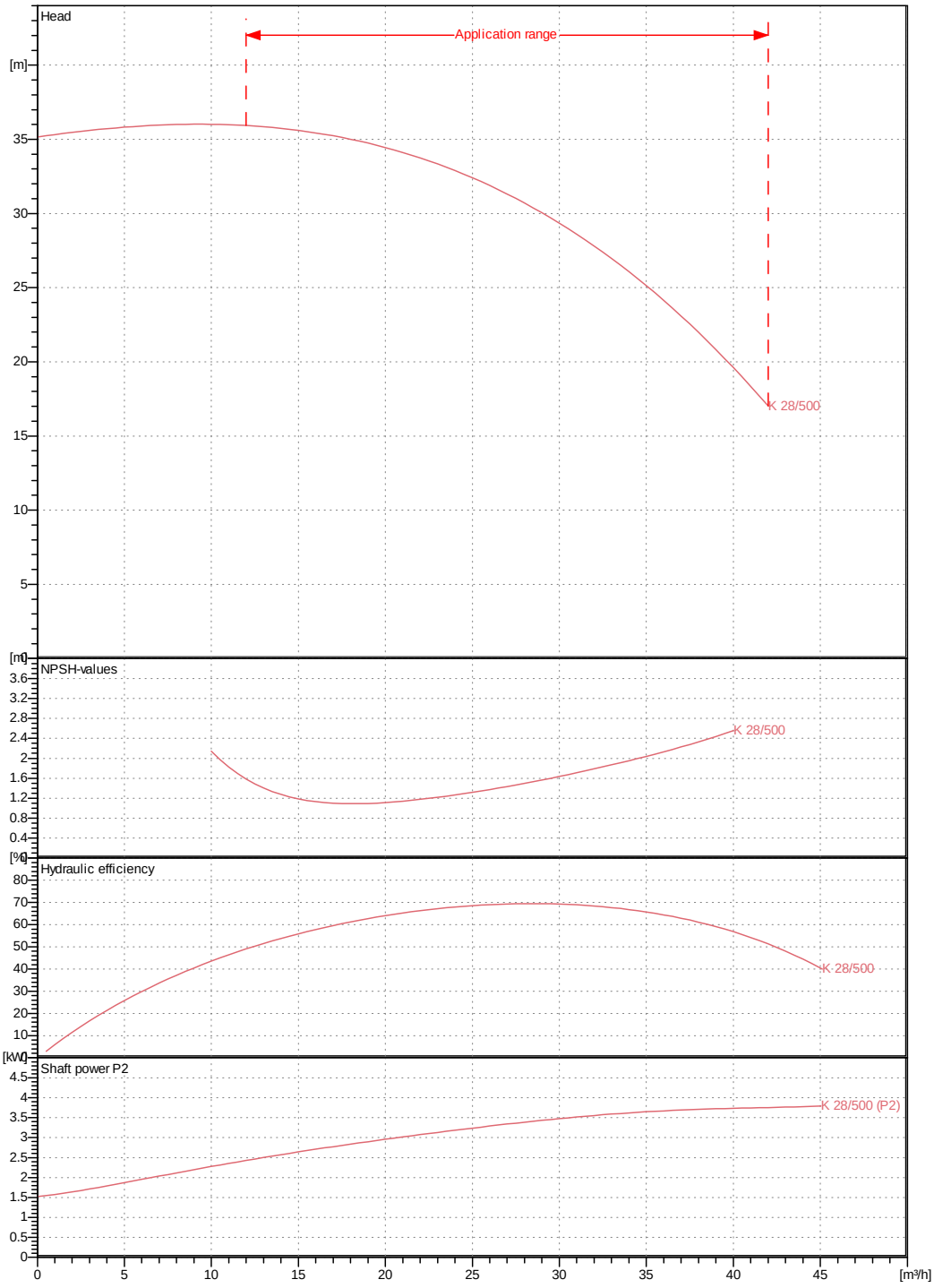

Hydraulic data (duty point)

Suction side :	Discharge side :	Flow :	Head :	Rated speed :
2 " 1/2 G 8 bar (800 kPa)	2 " G 8 bar (800 kPa)	0 m³/h	0 m	2880 1/min

Project	Project ID	Created by	Created on
			2017-04-06

DAB PUMPS reserves the right to make modifications without notice

DAB PUMPS S.p.A.
Via Marco Polo, 14 - 35035 Mestrino (PD), Italy
Tel. +39 049 5125000 - Fax +39 049 5125950
www.dabpumps.com

Receiver	From
Society Reference Address Phone Fax E-mail	

K 28/500 T IE2

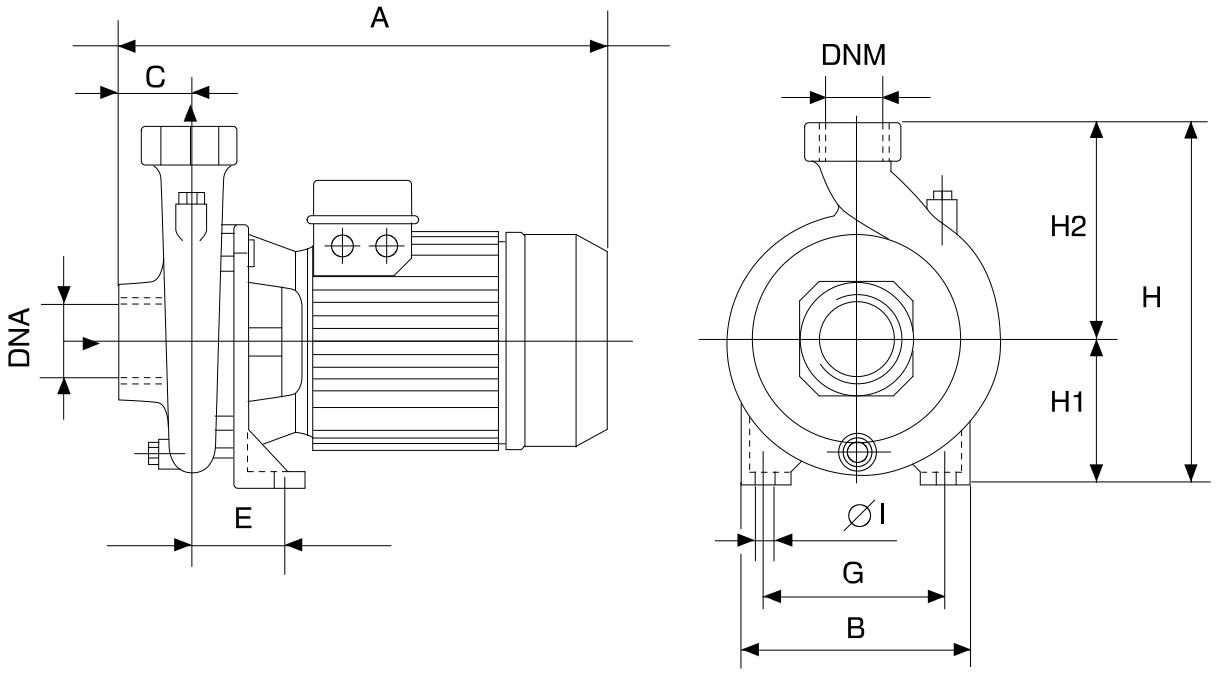

Dimensions in mm							Pump connection
1	A	440					
2	B	240					Suction
3	C	62					2 " 1/2 G
4	DNA	2" 1/2 G					8 bar (800 kPa)
5	DNM	2" G-M					
6	E	100					Discharge
7	G	155					2 " G
8	H	312					8 bar (800 kPa)
9	H1	132					
10	H2	180					

Project	Project ID	Created by	Created on
			2017-04-06

DAB PUMPS reserves the right to make modifications without notice